NUC12D User Manual

Issue 1.1

www.CoreIPC.com

© 2026 CoreIPC. All Rights Reserved.

Security Guidance

Copyright Statement

© 2026 CoreIPC. All rights reserved.
All trademarks and names mentioned in this user manual are the property of their respective registered companies.

Disclaimer

- This user manual is protected by copyright, and all content herein is the property of CoreIPC.
- CoreIPC reserves the right to modify the product specifications or related information mentioned in this user manual.
- Any modifications or changes to the product specifications or related information mentioned in this user manual will be made without prior notice.
- The contents of this user manual may not be reproduced, modified, reprinted, distributed, or published in any form without prior written permission from CoreIPC.

- To help you use the CoreIPC motherboard, please read the [User Manual] carefully.
- For product-related information, please be sure to read these safety instructions carefully.
- Identifying the Product Version
  You can find the version of this motherboard labeled [Issue:X.X] on the motherboard itself. X.X represents a number; for example, a label reading [Issue1.0] indicates that the version of this motherboard is 1.0. Please note the product version when updating the motherboard's BIOS or drivers, or when referring to other technical documentation.

Basic Safety Tips

1. Before using this product, please be sure to read the product manual carefully.
2. Any cards not yet ready for installation should be stored in anti-static bags.
3. Before removing the board from the antistatic bag, place your hand on a grounded metal object for a moment (such as 10 seconds) to discharge any static electricity from your body and hands.
4. When handling circuit boards, you must wear anti-static gloves and make it a habit to touch only the edges.
5. To prevent electric shock or damage to the product, be sure to turn off the AC power before inserting, removing, or reconfiguring the board.
6. Before moving a board or the entire unit, you must first turn off the AC power.
7. For complete systems, be sure to turn off the AC power before adding or removing any boards.
8. Before connecting or disconnecting any device, you must first turn off the AC power.
9. To avoid unnecessary damage to the product caused by frequent power cycles, wait

at least 30 seconds after turning it off before turning it back on.

CoreIPC

© 2026 CoreIPC. All Rights Reserved.

Ordering Information

No.	Model	CPU Model	Cores	Freq.	DDR	HDMI	VGA	LAN	USB	COM/ 485	POWER
1	NUC12D-N22-1215U	I3-1215U	2P/4E	1.2-4.4Ghz	DDR4	1	1	2	8	2/2	12-19V
2	NUC12D-N22-1235U	I5-1235U	2P/8E	1.3-4.4Ghz	DDR4	1	1	2	8	2/2	12-19V
3	NUC12D-N22-1265U	I7-1265U	2P/8E	1.8-4.8Ghz	DDR4	1	1	2	8	2/2	12-19V
4	NUC12D-N22-1240P	I5-1240P	4P/8E	1.7-4.4Ghz	DDR4	1	1	2	8	2/2	12-19V
5	NUC12D-N22-12450H	I5-12450H	4P/4E	2.0-4.4Ghz	DDR4	1	1	2	8	2/2	12-19V
6	NUC12D-N22-1340P	I5-1340P	4P/8E	1.9-4.6Ghz	DDR4	1	1	2	8	2/2	12-19V
7	NUC12D-N22-1335U	I5-1335U	2P/8E	1.3-4.6Ghz	DDR4	1	1	2	8	2/2	12-19V

CoreIPC

© 2026 CoreIPC. All Rights Reserved.

1. Product Description

NUC12D is a CoreIPC NANO-series motherboard supporting the full range of Intel® Alder Lake processors. It is suitable for software routers, network security, industrial control, cloud terminals, and other applications.

The main features of the NUC12D motherboard are as follows:

- Supports Intel® Alder Lake-U/P and Raptor Lake-U/P Core™ i3/i5/i7 series processors;
- 1 × SO-DIMM slot supporting single-channel DDR4-3200 memory, up to 32 GB;
- Display outputs include VGA or DP, HDMI, and optional USB Type-C;
- Supports 2 × Realtek Gigabit Ethernet ports, with a single-LAN option;
- Supports 1 × M.2 Key M storage interface with automatic SATA/PCIe x4 adaptation;
- Supports 1 × Mini PCIe interface for Wi-Fi/4G modules;
- Supports 8 × USB ports;
- Supports 2 × RS-232 ports and 2 × RS-485 ports by default; optional support for 4 × RS-232 ports and 1 × RS-422 port;
- Supports AT/ATX power modes and 12–19 V DC input.

CoreIPC

© 2026 CoreIPC. All Rights Reserved.

2. Motherboard Block Diagram

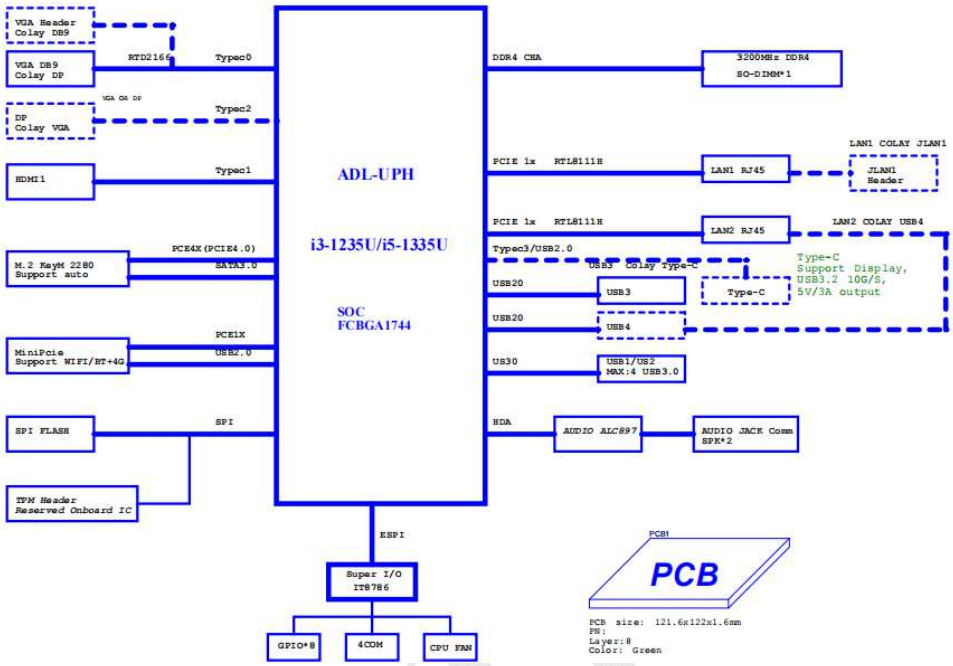

© 2026 CoreIPC. All Rights Reserved.

3. Motherboard Specifications

Item	Description
Processor	Supports 12th Gen Intel® Alder Lake-U/P/H and 13th Gen Intel® Raptor Lake-U/P/H Core™ i3/i5/i7 processors
Memory	1 × SO-DIMM slot supporting single-channel DDR4-3200 memory, up to 32 GB
Display	Integrated Intel® UHD Graphics
	1 × VGA or DP port (VGA extension header available for customization; DP supports 4K at 60 Hz), and 1 × HDMI 2.0 port supporting 4K at 60 Hz
	1 × optional USB Type-C display port supporting 4K at 60 Hz
	Supports synchronous or asynchronous display through VGA or DP and HDMI
Network	2 × Realtek RTL8111H Gigabit Ethernet controllers (single-LAN option), supporting Wake-on-LAN and PXE boot
Storage	1 × 7-pin SATA 3.0 connector with transfer rates up to 6 Gbps
	1 × M.2 Key M 2280 PCIe x4 slot with automatic PCIe/SATA drive adaptation
Audio	Onboard ALC897 7.1-channel HD audio controller supporting MIC, Line-out, and 2 Ω / 5 W stereo amplification
Expansion Slots	1 × Mini PCIe slot supporting Wi-Fi and 4G modules
Front I/O	1 × HDMI display port supporting 4K at 60 Hz
	1 × VGA display port, mutually exclusive with the 4K 60 Hz DP option; VGA is fitted by default
	2 × USB 2.0 ports; optional USB Type-C supports 4K display and USB 3.0 data rates
	2 × RJ-45 Gigabit Ethernet ports; LAN2 and the USB 2.0 ports are mutually exclusive
	1 × 12–19 V DC input; supported input voltage depends on CPU power consumption
Rear I/O	1 × 3.5 mm audio jack supporting Line-out and MIC-in
	2 × RS-232 serial ports (DB9)
	4 × USB 3.0 ports
	1 × illuminated power button
	1 × HDD activity LED
	1 × Clear CMOS button
Internal I/O	2 × COM headers, not populated by default; optional support for four RS-232 ports
	1 × 1 × 4-pin amplifier connector
	1 × USB 2.0 header supporting two USB 2.0 ports; signals are shared with LAN2
	1 × 2 × 5-pin GPIO header
	1 × 1 × 4-pin drive power connector

© 2026 CoreIPC. All Rights Reserved.

	1 × 4-pin ATX power connector
	1 × 2 × 5-pin front-panel switch and LED header
Security	1 × 2 × 6-pin TPM 2.0 header, with provision for onboard TPM
Operating Temperature	-10℃～60℃
Storage Temperature	-20℃～70℃
Operating Humidity	5%–95% relative humidity, non-condensing
Dimensions	120mm x 120mm

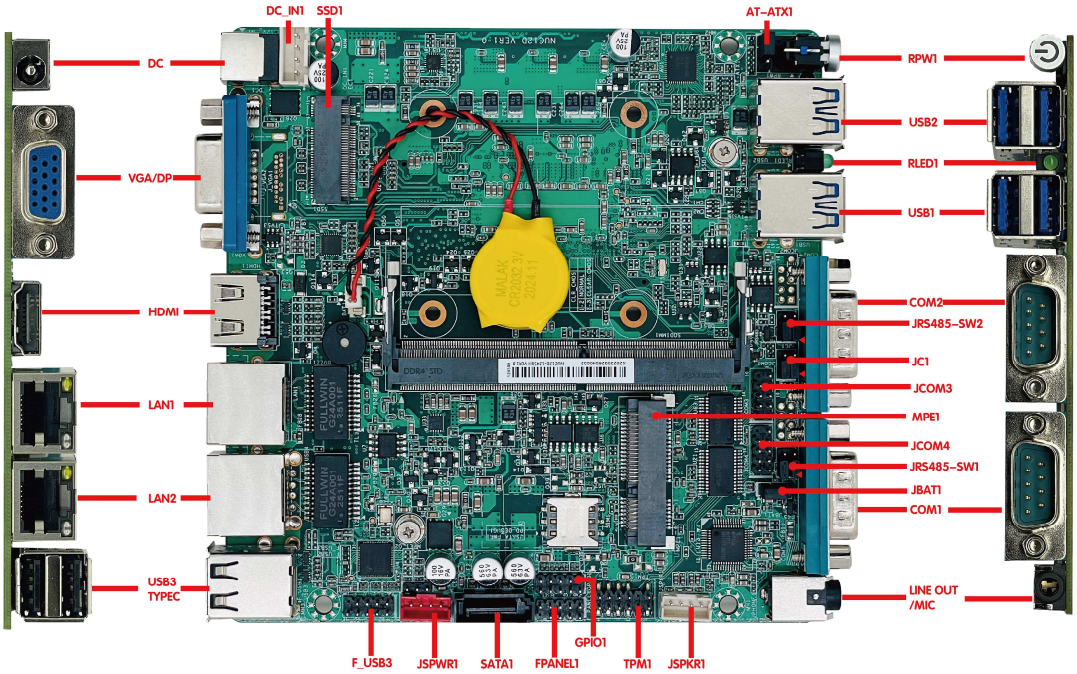

Note: The image above shows the front view of NUC12D VER1.0. Other models may differ. The image can be enlarged for viewing. Pin 1 of each header is marked with a red triangle.

© 2026 CoreIPC. All Rights Reserved.

4. Board Installation

⚠Safety Precautions：

Before installing the motherboard, please read and follow the safety precautions below:

- Do not remove or damage the serial number label, distributor warranty label, or any other warranty-related labels on the motherboard before installation. Otherwise, it may affect the warranty validation.
- Before installing or removing the motherboard or any other hardware devices, make sure the power is turned off and the power cord is unplugged from the power outlet.
- When installing hardware devices into the motherboard connectors or slots, make sure the connectors are firmly and properly seated.
- When handling the motherboard, avoid touching the metal contacts or circuit areas to prevent short circuits.
- When handling the motherboard, CPU, or memory module, it is recommended to wear an anti-static wrist strap. If an anti-static wrist strap is not available, make sure your hands are dry and touch a grounded metal object first to discharge static electricity.
- Before installation, place the motherboard on an anti-static mat or inside an anti-static bag.
- Before unplugging the power connector from the motherboard, make sure the power supply is turned off.
- Before turning on the power, make sure the power supply voltage is set according to the local voltage standard.
- Before turning on the power, make sure all hardware cables and power cables are correctly connected.
- Do not allow screws to contact the circuits or components on the motherboard, as this may cause damage or malfunction.
- Make sure no screws or metal objects are left on the motherboard or inside the computer chassis.
- Do not place the computer system on an unstable surface.
- Do not place the computer system in a high-temperature environment.
- Turning on the power during installation may cause damage to the motherboard, other devices, or personal injury.
- If you are not familiar with the installation process, or if you encounter any technical problems while using this product, please consult qualified technical personnel.

Memory Installation

This motherboard provides **1 × 260-pin DDR4 SO-DIMM memory slot**.

Before installing the memory module, please note the following:

1) Make sure the memory module you purchased is compatible with the specifications

© 2026 CoreIPC. All Rights Reserved.

supported by this motherboard.

2) Before installing or removing the memory module, make sure the computer power is turned off to prevent damage.
3) The memory module is designed with a foolproof notch. If the insertion direction is incorrect, the module cannot be inserted. In this case, please change the insertion direction immediately.

Memory Installation Steps:

1) Before installing or removing the memory module, turn off the power and unplug the AC power cord.
2) Carefully hold the memory module by both edges. Do not touch the metal contacts.
3) Align the gold fingers of the memory module with the memory slot. Make sure the notch on the memory module matches the key in the slot.
4) Insert the memory module into the slot at an angle of approximately 30 degrees, then gently press it down until you hear a “click” sound. This indicates that the memory module has been properly installed and is ready for use.
   Note: Do not apply excessive force when pressing down the memory module to avoid damage.
5) To remove the memory module, push the retaining clips on both sides of the DIMM slot outward at the same time, then remove the memory module carefully.

Note: The installation diagram is for reference only.

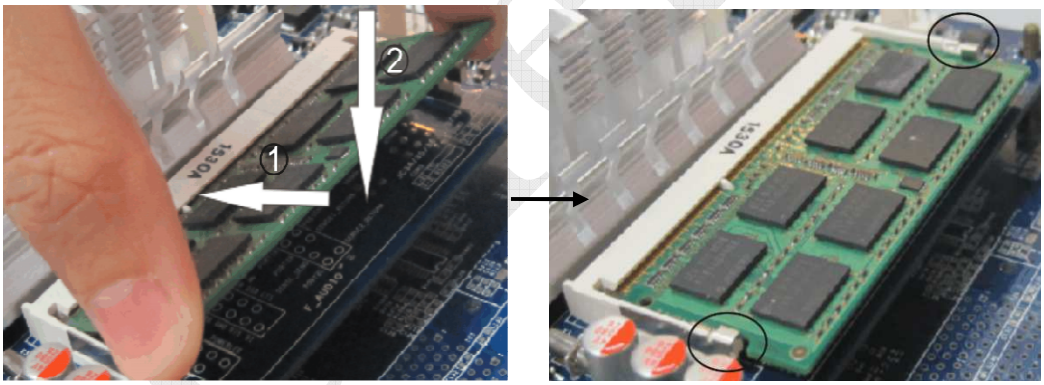

© 2026 CoreIPC. All Rights Reserved.

5. Jumper Settings

Jumper Description

For a **2-pin header**, installing a jumper cap on the two pins will close the circuit, creating a short connection.

For a **3-pin header**, the jumper cap can be installed on **Pin 1–2** or **Pin 2–3** to close the corresponding circuit and create a short connection.

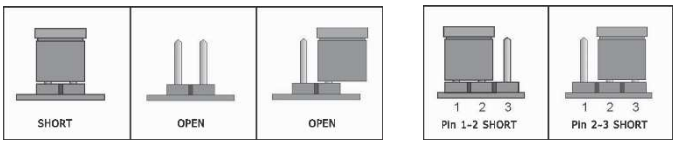

How to Identify Pin 1 of a Jumper?

1) Carefully check the motherboard. The pin marked with “1” or indicated by a thick white line is usually Pin 1.
2) Check the solder pads on the back side of the motherboard. In most cases, the square solder pad indicates Pin 1.

Clear CMOS Jumper:
The motherboard provides 1 × 1×3-pin Clear CMOS header JBAT1 for clearing or retaining CMOS settings.
Pin pitch: 2.0 mm

The CMOS is powered by the onboard button battery. Clearing the CMOS will permanently erase the previous system configuration and restore the system settings to the default factory values.

To clear the CMOS, follow the steps below:

1) Turn off the computer and disconnect the power supply.
2) Short Pin 2–3 of JBAT1 for approximately 5 seconds.
3) Power on the computer.
4) During startup, follow the on-screen prompt to enter BIOS Setup, then load the optimized default settings.
5) Save the settings and exit BIOS Setup.

Pin definition is shown below:

JBAT1 Definition:

Function	JBAT1 Setting
Normal operation	1-2Pin
Clear CMOS and restore all BIOS settings to factory defaults	2-3Pin

© 2026 CoreIPC. All Rights Reserved.

AT/ATX Power Mode Jumper

The motherboard provides **1 × 1×3-pin AT-ATX1 jumper** for selecting the power-on mode.
Pin pitch: 2.54 mm

The power-on behavior can be configured by the jumper setting.

AT-ATX1 Definition:

Function	AT-ATX1 Setting
Disable Auto Power-on	1-2Pin (default)
Enable Auto Power-on	2-3Pin

CoreIPC

© 2026 CoreIPC. All Rights Reserved.

6. Pin Definitions

6.1. Up to four serial ports are supported (two standard DB9 serial ports by default). The motherboard provides four 2 × 5-pin standard COM headers with a 2.0 mm pitch. COM1 and COM2 support RS-232 or RS-485 through jumper settings. The standard pin definitions of JCOM1, JCOM2, JCOM3, and JCOM4 are as follows:
(For four RS-232 ports or RS-422 support on COM2, please contact sales before ordering for customization.)

PIN	Signal Name	PIN	Signal Name
1	DCD（A）	2	RXD（B）
3	TXD	4	DTR
5	GND	6	DSR
7	RTS	8	CTS
9	RI	10	NC

JCOM1 and COM1 share the same signals and are mutually exclusive. JCOM2 and COM2 also share the same signals and are mutually exclusive. JCOM1 and JCOM2 are not populated by default. Hardware modification is required for four serial ports; please contact our sales team.

6.2. COM1 and COM2 support RS-232 by default and can also support RS-485 through jumper settings, as shown below:

Port	Function	JRS485_SW1 Setting	JC1 Setting	Definition
COM1	RS232	1-3Pin ,2-4Pin（Default）	1-3Pin（Default）	COM1 Pin 2: RXD COM1 Pin 3: TXD
	RS485	3-5Pin ,4-6Pin	3-5Pin	COM1 Pin 1: A COM1 Pin 2: B

Port	Function	JRS485_SW2 Setting	JC1 Setting	Definition
COM2	RS232	1-3Pin ,2-4Pin（Default）	2-4Pin（Default）	COM2 Pin 2: RXD COM2 Pin 3: TXD
	RS485	3-5Pin ,4-6Pin	4-6Pin	COM2 Pin 1: A COM2 Pin 2: B
Port	**Function**	**JRS485_SW2 Setting**	**JC1 Setting**	**Definition**
COM2	RS422	3-5Pin ,4-6Pin	4-6Pin	COM2 Pin 1 is TX+ COM2 Pin 2 is TX- COM2 Pin 3 is RX+ COM2 Pin 4 is RX-

6.3. The motherboard provides 1 × 1 × 4-pin amplifier header with a 2.0 mm pitch. The JSPKR1 pin definition is as follows:

PIN	Signal Name
1	SPKL-
2	SPKL+
3	SPKR-
4	SPKR+

6.4. The motherboard provides 1 × 2 × 5-pin FPANEL1 header with a 2.0 mm pitch. The chassis power switch, reset switch, HDD LED, and power LED can be connected to

© 2026 CoreIPC. All Rights Reserved.

this header. The FPANEL1 pin definition is as follows:

PIN	Signal Name	PIN	Signal Name
1	HDDLED+	2	PWRLED+
3	HDDLED-	4	PWRLED-
5	GND	6	PWRBTN#
7	RESETBTN#	8	GND
9	NC	10	

6.5. The motherboard provides 1 × optional 1 × 4-pin fan connector. The CPUFAN1 pin definition is as follows:

PIN	Signal Name	PIN	Signal Name
1	GND	2	+12V
3	DET	4	PWM

Note: DET: fan speed pulse output; PWM: fan speed PWM control.

6.6. The motherboard provides 1 × 2 × 6-pin TPM 2.0 header. The TPM1 pin definition is as follows:

PIN	Signal Name	PIN	Signal Name
1	SPI POWER	2	SPI CS#
3	SPI MISO	4	SPI MOSI
5	NC	6	SPI CLK
7	GND	8	SPI RESET
9	NC		
11	NC	12	SPI IRQ

6.7. The motherboard provides 1 × 2 × 5-pin GPIO header with a 2.0 mm pitch. The GPIO1 pin definition is as follows:

PIN	Signal Name	PIN	Signal Name
1	GND	2	+5V
3	GPO1	4	GPI1
5	GPO2	6	GPI2
7	GPO3	8	GPI3
9	GPO4	10	GPI4

6.8. The motherboard provides 1 × red 1 × 4-pin SATA drive power connector with a 2.0 mm pitch. The JSATA_PWR1 pin definition is as follows:

PIN	Signal Name
1	+12V
2	GND
3	GND
4	+5V

Make sure the Pin 1 position of JSPWR1 is correct; otherwise, the drive may be damaged. Use only the power cable supplied by CoreIPC.

6.9. The motherboard provides 1 × 1 × 4-pin DC power connector. The DC_IN1 pin definition is as follows:

PIN	Signal Name
1	+12V/19V

© 2026 CoreIPC. All Rights Reserved.

2	+12V/19V
3	GND
4	GND

6.10. The motherboard provides 1 × 2 × 5-pin USB 2.0 header with a 2.0 mm pitch. The F_USB3 pin definition is as follows:

PIN	Signal Name	PIN	Signal Name
1	+5V	2	+5V
3	Data0-	4	Data1-
5	Data0+	6	Data1+
7	GND	8	GND
9		10	GND

CoreIPC

© 2026 CoreIPC. All Rights Reserved.